REVISION RECORD			
LTR	ECO NO:	APPROVED:	DATE:

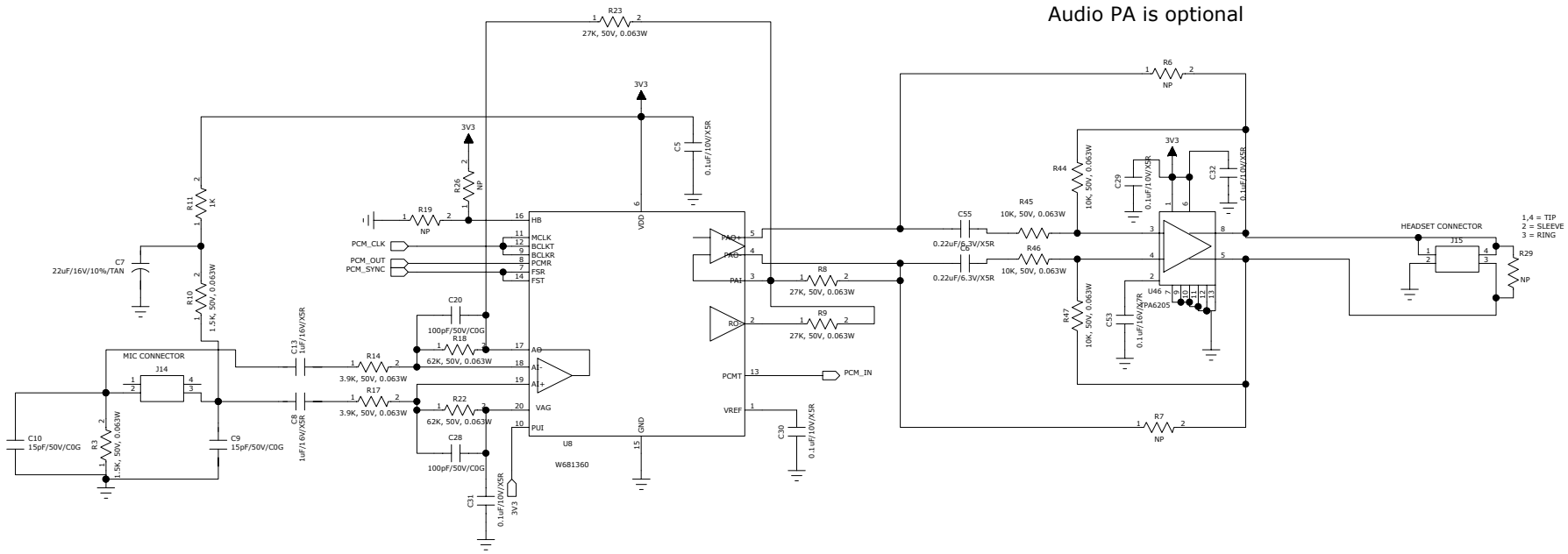

PSKEYS:

PCM_DATAFORMAT: 0x006c

PCM_CONFIG32: 0x00401000

HOSTIO_MAP_SCO_PCM: true

COMPANY:	Bluegiga		
TITLE:	WT21 Evaluation board		
DRAWN:	DATED:		
CHECKED:	DATED:	CODE:	SIZE: A2	DRAWING NO:	REV:
QUALITY CONTROL:	DATED:		
RELEASED:	DATED:	SCALE:	SHEET: 3 OF 4